DWG. NO.	SH	REV.
	1	1

COMPANY CONFIDENTIAL: The information contained herein is the property of MICA Microwave. Its used or reproduction is prohibited except as provided for by prior written authorization from MICA Microwave.

NOTE: THIS IS A COMPUTER GENERATED DRAWING. ALL CHANGES HEREIN MUST BE REFLECTED IN THE COMPUTER DATABASE.

REV.	DESCRIPTION	DATE	APPROVED
1	CATALOG		

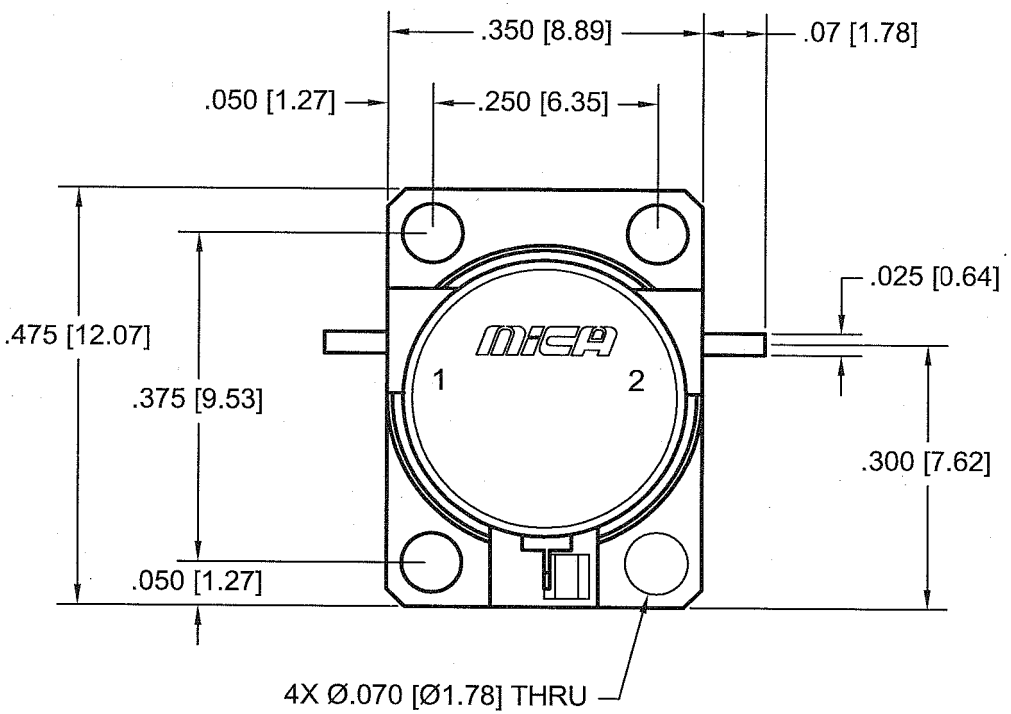

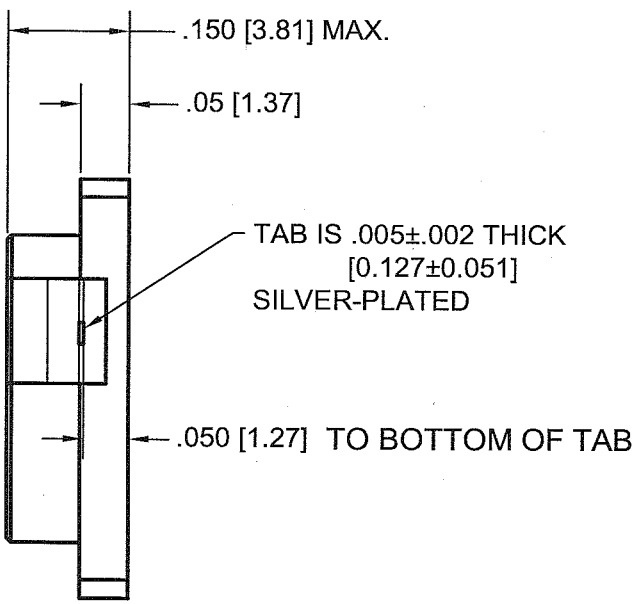

		UNLESS OTHERWISE SPECIFIED DIMENSIONS ARE IN INCHES, TOLERANCES ARE: FRACTIONS ± DECIMALS .XX± .020 [0.51] .XXX± .005 [0.127] .XXXX± ANGLES ± 1°	APPROVALS	DATE	MICA®
			DRAWN PITCHELL	10/13/2005	OUTLINE DRAWING DCF0890 PACKAGE
		MATERIAL	CHECKED		
NEXT ASSY	USED ON	FINISH NICKEL PLATE	ISSUED		SIZE A · FSCM NO. 7Y213 · DWG. NO. 213543 · REV. 1
APPLICATIONS		DO NOT SCALE DRAWING	QA		SCALE NONE · SHEET 1 OF 1