DWG. NO.	SH	REV.
213535	1	1

COMPANY CONFIDENTIAL: The information contained herein is the property of MICA Microwave. Its used or reproduction is prohibited except as provided for by prior written authorization from MICA Microwave.

NOTE: THIS IS A COMPUTER GENERATED DRAWING. ALL CHANGES HEREIN MUST BE REFLECTED IN THE COMPUTER DATABASE.

REV.	DESCRIPTION	DATE	APPROVED
1	CATALOG		

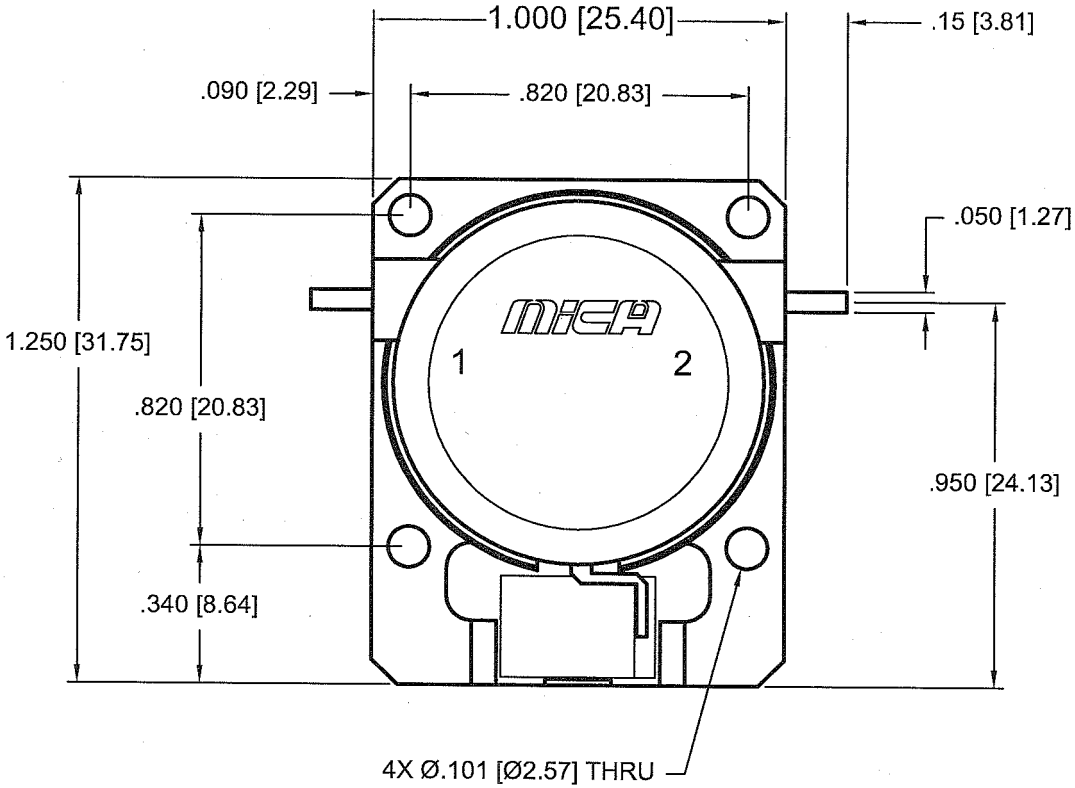

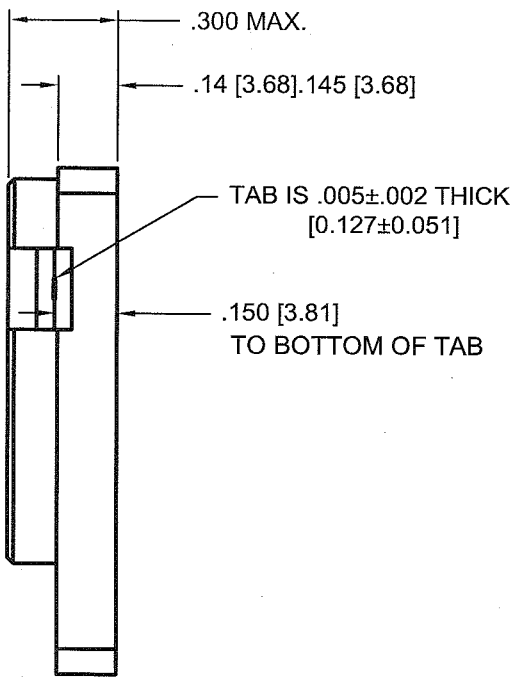

		UNLESS OTHERWISE SPECIFIED DIMENSIONS ARE IN INCHES, TOLERANCES ARE: FRACTIONS ± DECIMALS .XX± .020 [0.508] .XXX± .005 [0.127] .XXXX± ANGLES ± 1°	APPROVALS	DATE
			DRAWN PITCHELL	10/13/2005
		MATERIAL	CHECKED	
NEXT ASSY	USED ON	FINISH NICKEL PLATE	ISSUED	
APPLICATIONS		DO NOT SCALE DRAWING	QA	

MICA®

OUTLINE DRAWING
DCF2540 PACKAGE HIGH-POWER

SIZE	FSCM NO.	DWG. NO.	REV.
A	7Y213	213535	1

SCALE	SHEET
NONE	1 OF 1